DYMO®

LabelManager® PnP

User Guide

newell BRANDS

Copyright

© 2019 Newell Rubbermaid Europe, LLC. All rights reserved.
No part of this document may be reproduced or transmitted in any form or by any means, or translated into another language without the prior written consent of Newell Rubbermaid Europe, LLC.

Trademarks

DYMO and LabelManager are registered marks in the United States and other countries. All other trademarks are the property of their respective holders.

FCC Statement

Caution: The user is cautioned that changes or modifications not expressly approved by the party responsible for compliance could void the user's authority to operate the equipment.
Note: This equipment has been tested and found to comply with the limits for a Class B digital device, pursuant to part 15 of the FCC Rules. These limits are designed to provide reasonable protection against harmful interference in a residential installation. This equipment generates, uses and can radiate radio frequency energy and, if not installed and used in accordance with the instructions, may cause harmful interference to radio communications. However, there is no guarantee that interference will not occur in a particular installation. If this equipment does cause harmful interference to radio or television reception, which can be determined by turning the equipment off and on, the user is encouraged to try to correct the interference by one or more of the following measures:

- Reorient or relocate the receiving antenna.
- Increase the separation between the equipment and receiver.
- Connect the equipment into an outlet on a circuit different from that to which the receiver is connected.
- Consult the dealer or an experienced radio/TV technician for help.

Quick Start

Make sure you have all the items shown in Figure 1. (Labels included in the package may vary.)

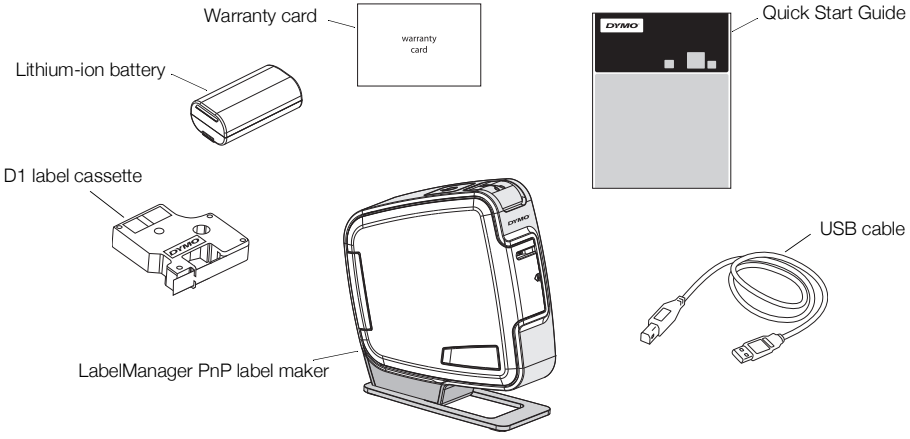

Figure 1

Become familiar with the features shown in Figure 2.

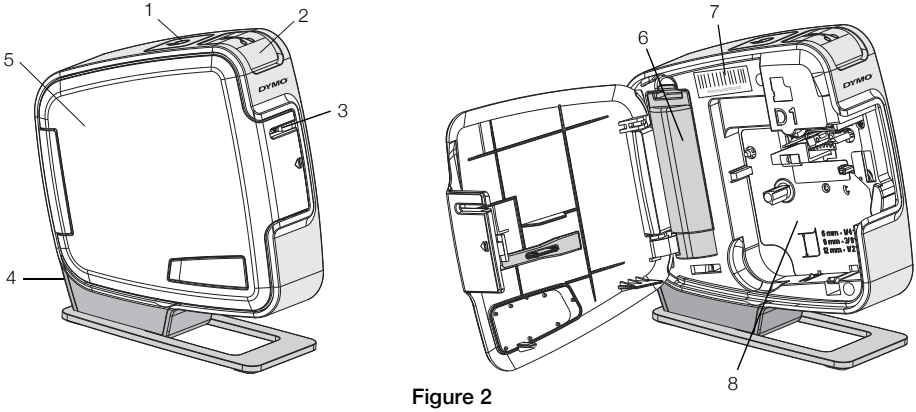

Figure 2

1	Power button/Status light	**4**	USB port	**7**	Serial Number label
2	Cutter button	**5**	Side cover	**8**	Label compartment
3	Label exit slot	**6**	Battery compartment		

Inserting the Battery

The label maker is powered using a rechargeable lithium-ion battery.

To insert the battery

1. Open the side cover of the label maker.
2. Remove the battery compartment cover. See Figure 3.
3. Insert the battery into the battery compartment as shown.
4. Replace the battery compartment cover.
5. Close the side cover of the label maker.

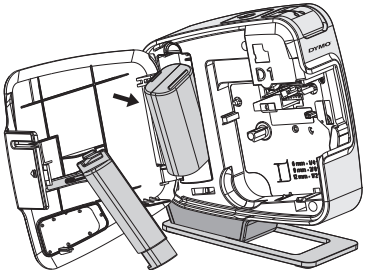

Figure 3

NOTE Remove the battery if the label maker will not be used for a long period of time.

Inserting the Label Cassette

Your label maker uses DYMO D1 label cassettes.

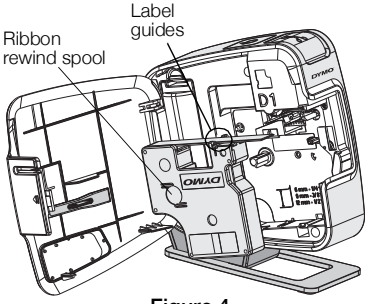

Figure 4

To insert the label cassette

1. Open the side cover of the label maker.
2. Make sure the tape and ribbon are taut across the mouth of the cassette and that the tape passes between the label guides.

   If necessary, turn the ribbon rewind spool clockwise to tighten the ribbon.
3. Insert the cassette and press firmly until the cassette clicks into place. See Figure 5.
4. Close the side cover of the label maker.

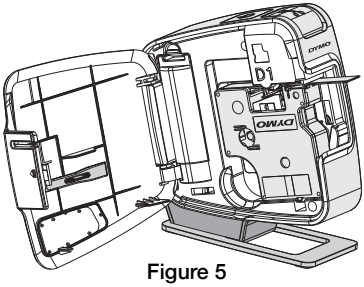

Figure 5

The cutter blade is extremely sharp. Keep fingers and other body parts away from cutter blade and do not press the cutter button.

Connecting the Label Maker to your Computer

The label maker connects to your computer using the USB connection located on the back of the label maker. You do not need to install additional software or drivers to use the label maker with your computer.

To connect the label maker to your computer

1. Plug the USB cable into the USB port on the back of the label maker. See Figure 6.
2. Plug the other end of the USB cable into an available USB port on your computer.

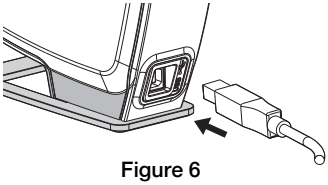

Figure 6

NOTE The label maker must be connected to a powered USB port. The label maker may not charge or function properly when connected to a non-powered USB port, such as those on some Mac keyboards, or a non-powered USB hub.

Starting the Built-In Software

The built-in software resides on the label maker; no installation is required.

To start the software for Windows®

1. If necessary, press the power button to turn on the label maker.

   Depending on Windows AutoRun settings, the software may start automatically.

2. If the software does not start automatically, do one of the following:
   - If the AutoRun or AutoPlay dialog box appears, follow the on-screen instructions to start the DYMO Label Light software.
   - If the AutoRun dialog box does not appear, navigate to **My Computer→DYMO PnP**, and then click **DYMO Label Light.exe**.

To start the software for Mac OS®

1. If necessary, press the power button to turn on the label maker.

   The DYMO PnP volume appears on your desktop.

2. Double-click **DYMO PnP** to open the volume.
3. Double-click to start the software.

Disconnecting the Label Maker from Your Computer

To disconnect the label maker from your computer

1. (Mac Only) Drag the **DYMO PnP** volume to the trash.
2. Press the power button to turn off the label maker.
3. Unplug the USB cable from your computer.

Printing Labels with the Built-In Software

The following figure shows some of the features available in the software.

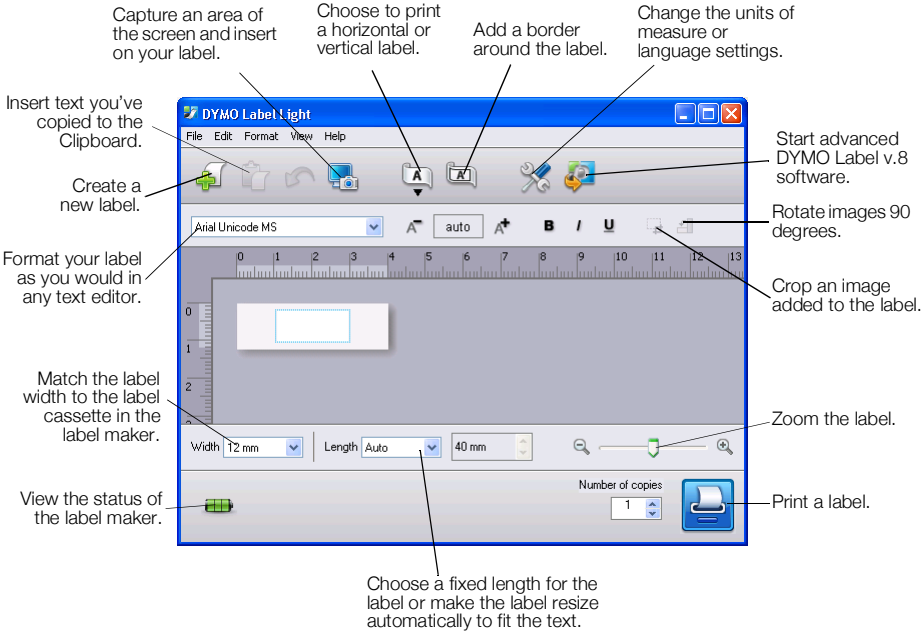

To print your first label

1. Click once on the label in the Edit area and type some text.
2. Click to print the label.
3. Press the cutter button on the label maker to cut the label.

To capture and insert an image from your desktop

1. Click on the toolbar.
2. Drag the curser to draw a selection box around the area to capture.

   The selected area is inserted into your label.

To take advantage of more advanced formatting features, click in the built-in software to download and install DYMO Label™ software from the DYMO Web site.

Maintaining Your Label Maker

Recharging the Battery

The label maker is shipped with the lithium-ion battery partially charged. The battery is recharged through the USB connection to your computer.

NOTE The label maker must be connected to a powered USB port. The label maker may not charge or function properly when connected to a non-powered USB port, such as those on some Mac keyboards, or a non-powered USB hub.

The label maker status is displayed in the lower-left corner of the software window. The following table describes the possible states of the label maker.

	Label maker is connected and battery is charging
	Label maker is connected and battery is not charging
	Label maker is not connected
	Label maker is connected and there is a problem with the battery

To charge the battery

1. Make sure the USB cable is connected to both the label maker and the computer.
2. If necessary, press the power button to turn on the label maker and begin charging the battery.

Cleaning the Label Maker

Your label maker is designed to give you long and trouble-free service, while requiring very little maintenance. Clean your label maker from time to time to keep it working properly. Clean the cutter blade each time you replace the label cassette.

To clean the tape print head

1. Open the side cover of the label maker.
2. Remove the label cassette.
3. Use a small, soft brush or cotton swab to wipe away paper dust and other stray particles from the inside of the label compartment.
4. Remove the cleaning tool from the inside of the cover. See Figure 7.
   If you do not have a cleaning tool, contact DYMO Customer Care (http://support.dymo.com).

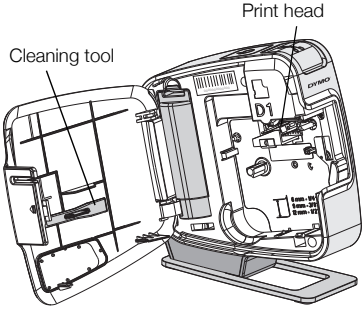

Figure 7

5. Gently wipe the print head with the tool.

   The print head is very delicate, so use care when cleaning.
6. Replace the cleaning tool, insert the label cassette, and close the side cover.

To clean the cutter blade

1. Open the side cover of the label maker.
2. Remove the label cassette.
3. Press the cutter button. See Figure 8.

   The cutter blade will move into view.
4. Use a cotton swab and alcohol to clean both sides of the cutter blade.

The cutter blade is extremely sharp. Avoid direct contact with the cutter blade while cleaning the blade.

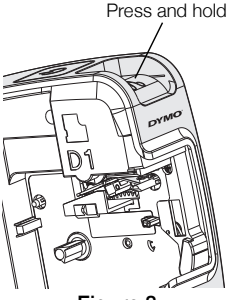

Figure 8

5. After cleaning the blade, release the cutter button to return the blade to its home position.

Troubleshooting

Review the following possible solutions if you encounter a problem while using your label maker.

Problem/Error Message	Solution
Poor Print Quality	Ensure label cassette is installed properly. Clean the print head. See Cleaning the Label Maker. Replace the label cassette.
Poor Cutter Performance	Clean the cutter blade. See Cleaning the Label Maker.
Printer is disconnected or turned off	The label maker is disconnected or turned off. Make sure the USB cable is connected and the printer is turned on.
Printer error	Make sure the label cassette is inserted properly and is not jammed or empty.
Battery level is too low to print	Battery charge level is too low to print. Charge the battery and reprint the label.
Battery is not functioning properly	Verify the battery is inserted properly. Otherwise, contact Customer Support.
Battery is not charging	Make sure the label maker is connected to a powered USB port.
Battery level is getting low or too low	Connect the label maker to a powered USB port to begin charging.

If you still need assistance, visit the support section of the DYMO Web site at **www.dymo.com**.

Rechargeable Battery Safety Precautions

Battery type: LiPolymer 7.2V 600mAh 10.08Wh

Inaccurate handling of a lithium-ion polymer rechargeable battery may cause leakage, heat, smoke, an explosion, or fire. This could cause deterioration of performance or failure. This may also damage the protection device installed in the battery. This could damage equipment or injure users. Thoroughly follow the instructions below.

⚠ **Danger**

- Use the battery only in the LabelManager 420P label maker.
- Battery can only be charged while inserted in the label maker using the USB cable provided.
- Do not connect directly to an electric outlet or cigarette lighter charger.
- Do not store battery close to fire or inside the car where temperature may be over 60°C.

⚠ **Warning**

- Stop charging the battery if charging is not completed within three hours.

⚠ **Caution**

- Do not use the label maker or battery in a place that generates static electricity.
- Use the label maker only at room temperature.
- Battery can only be charged within +10°C — 35°C temperature range.
- Use only DYMO-branded battery.